bathco

Washbasin cabinet Oco

Ref. 00342
1200x500x850 mm

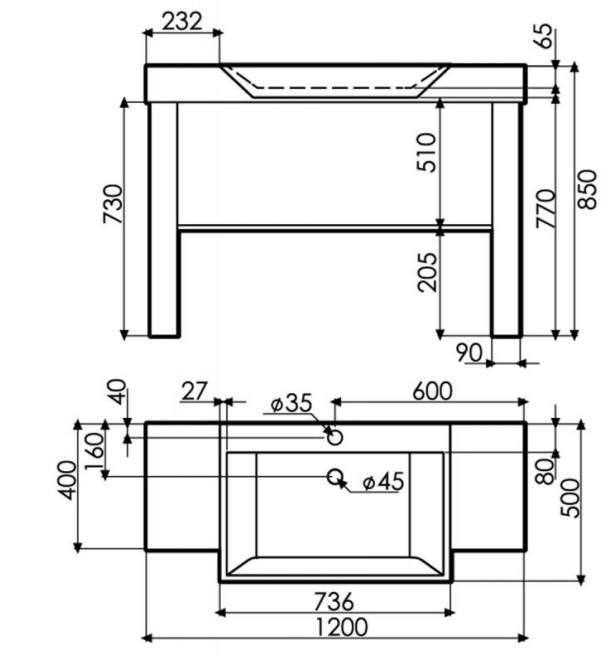

Features

Available colors:

Bath Collection S.L
Bajada del Caleruco, 21A 39012 Santander - SPAIN
T. +34 942 321 222 - F. +34 942 324 898 - info@thebathcollection.com